10.2 Back pressure valve / relief valve

ProMinent® DHV-DL (DHV-S, DHV-S-DL, DHV-SR, DHV-RM)

Pressure control/overflow valves for installation in metering line:

- Adjustable pressure control valve for installation in metering lines.
- Used to produce a constant backpressure to ensure precision delivery when metering with free outlet,for admission pressure on intake side, for fluctuating backpressure or metering to vacuum.
- Also used as safety overflow valve.
- If used as pressure control valve for avoiding resonance: Installation at end of metering line or set pressure (set pressure / line pressure) loss.

IMPORTANT

Pressure control/overflow valves are shut-off elements which do not close absolutely tight.

The DHV-S, DHV-S-DL series is used in conjunction with pulsation dampers only with free outlet and a short metering line.

The DHV-SR/RM series is not subject to the effect of backpressure and is therefore particularly suitable for use in cases of fluctuating backpressure at the pipe outlet and for use in conjunction with pulsation dampers or longer metering lines. The DHV-SR/RM series can be installed at any point along the metering line.

Type DHV-RM 1-10 bar

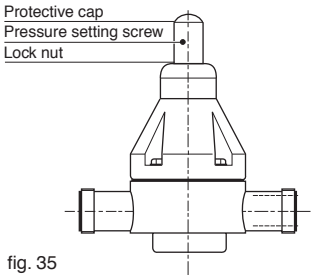

fig. 35

- ▶ Remove protective cap.
- ▶ Prior to pump operation: Unscrew pressure setting screw for pressure relief until it turns easily.
- ▶ During pump operation: Produce required operating pressure by turning in pressure setting screw: Read off set pressure at pressure gauge installed in pipe system.
- ▶ Secure pressure setting screw:
- ▶ Tighten lock nut.
- ▶ At required pressure relief, release lock nut and unscrew pressure setting screw until it moves easily.

10.3 Pulsation Dampers

Pulsation dampers are often used in conjunction with oscillatory displacement pumps. They are necessary when:

- Low-pulsation flow is required, for example, for process reasons.
- Depending on the piping situation, it is necessary to reduce impermissibly high pressure peaks during operation of oscillatory displacement pumps or pressure loss must be avoided; in this case, it is necessary to use pulsation dampers both on the intake side as well as the delivery side.

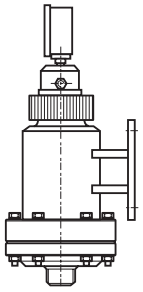

Diaphragm type pulsation damper (bubble accumulator)

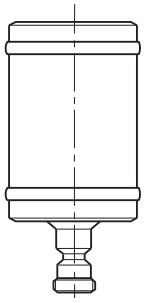

Compressed air vessel

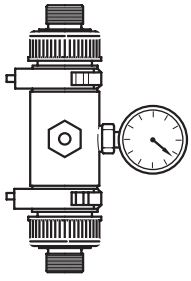

In-line damper

fig. 36

Schematic:
Diaphragm-type pulsation damper

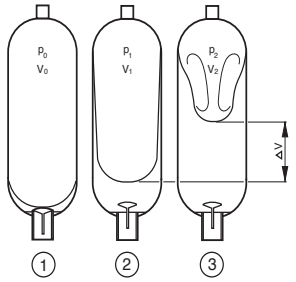

p_0 = Gas filling pressure
p_1 = Minimum operating pressure
p_2 = Maximum operating pressure
V_0 = Effective gas volume
V_1 = Gas volume at p_1
V_2 = Gas volume at p_2

△V = Change in volume for pulsation compensation

fig. 37

Function

Their function is based on compression and expansion of a gas cushion in order to release energy.
As the pressure increases, a part of the medium to be delivered is stored and then released to the pipe network as the pressure decreases.

In principle, a differentiation is made between pulsation dampers with and without a separating diaphragm.

In pulsation dampers without a separating diaphragm (e.g. air tank), the medium has direct contact with the gas cushion which is formed by feeding in compressed air. After start-up, the compressed air is compressed to the damping volume. Since the compressed air is gradually released in the medium, venting is necessary from time to time with the system depressurized.

This disadvantage is avoided by using pulsation dampers with a separating diaphragm.
In this case, the damping gas cushion is separated from the delivered medium by a flexible diaphragm and thus protected from absorption.

Installation

Diaphragm pulsation damper

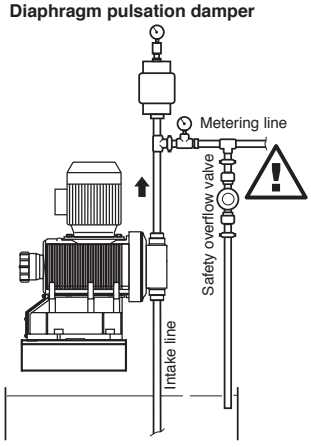

fig. 38

IMPORTANT

Observe the regulations valid at the place of installation prior to initial operation and during operation of pulsation dampers!

The Pressure Vessel Ordinance (Druckbeh.V.) is applicable in the Federal Republic of Germany.

IMPORTANT

Pulsation dampers can only fulfil their task of damping pressure peaks and pulses if they are installed correctly.

- **Integrate pulsation dampers in the system so that they are well accessible and free of vibration!**
- **Install pulsation damper in the immediate vicinity of the point where pressure peaks are to be dampened. For metering pumps this means installation at the shortest possible distance after the head valve of the liquid end (or immediately before the intake valve if a suction-air vessel is installed).**
- **Install connection line straight and corresponding to the connection diameter of the pulsation damper in order to avoid unnecessary deflection and pipe friction losses.**

In-line damper

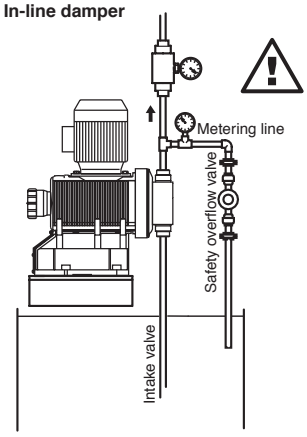

fig. 39

IMPORTANT

Do not use oxygen for preloading diaphragm-type pulsation dampers (or bubble accumulators) for air or nitrogen!

The greatest efficiency of pulsation dampers is achieved when the preload pressure is approx. 60–80 % of the subsequent mean operating pressure.

If the pulsation damper is not equipped with a pressure gauge, it is recommended to check the preload pressure (pv):

- After 500 hours of operation.
- Before resuming operation after a prolonged downtime.

A regular check every three months is recommended.